ASSEMBLY INSTRUCTION

Оттоманка АЛЬФА/ ALFA ottoman - 43202

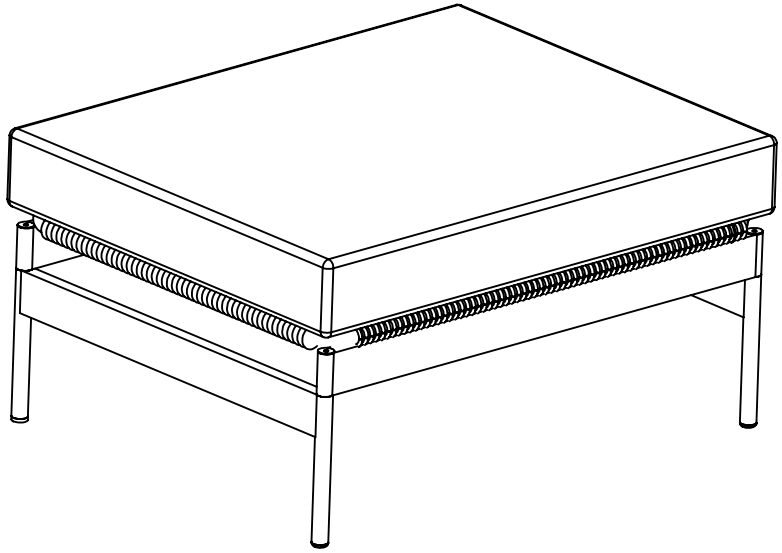

HARDWARES

CODE	PICTURES	Q.TY	CODE	PICTURES	Q.TY
1	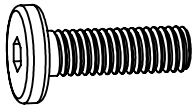 Bolt M6 x 20 mm	04	3	 Allen key M4	01
2	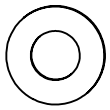 Flat washer	04	4	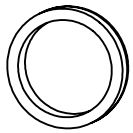 Shutter Button	04

Оттоманка АЛЬФА/ ALFA ottoman - 43202

CODE	PARTS	Q.TY
A	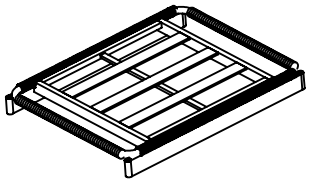 Seating Frame	01
B	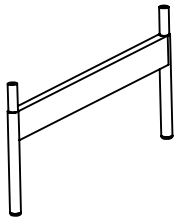 Leg Frame	02
C	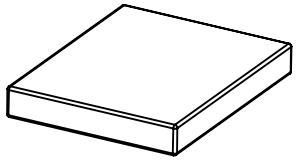 Seat Cushion	01

STEP 1

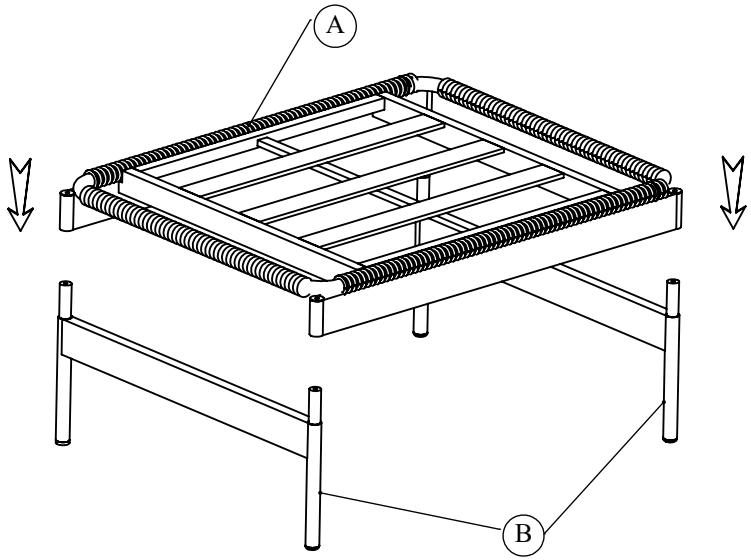

STEP 2

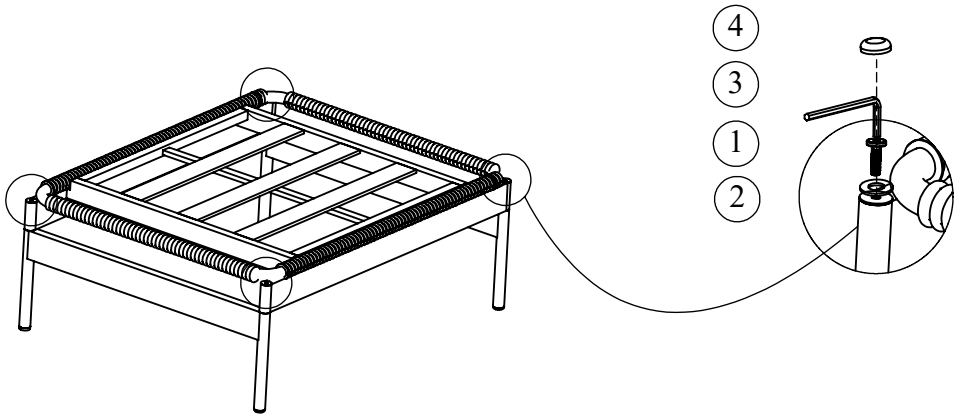

Оттоманка АЛЬФА/ ALFA ottoman - 43202

CODE	PARTS	Q.TY
A	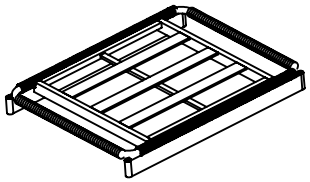 Seating Frame	01
B	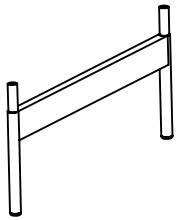 Leg Frame	02
C	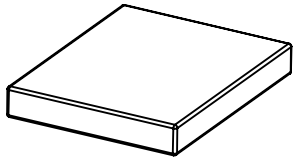 Seat Cushion	01

STEP 3

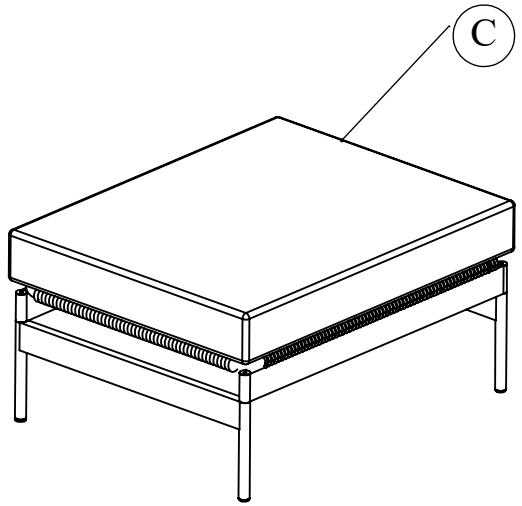

FINISH

