ASSEMBLY INSTRUCTIONS
Шезлонг АЛЬФА/ ALFA sunlounge - 43204

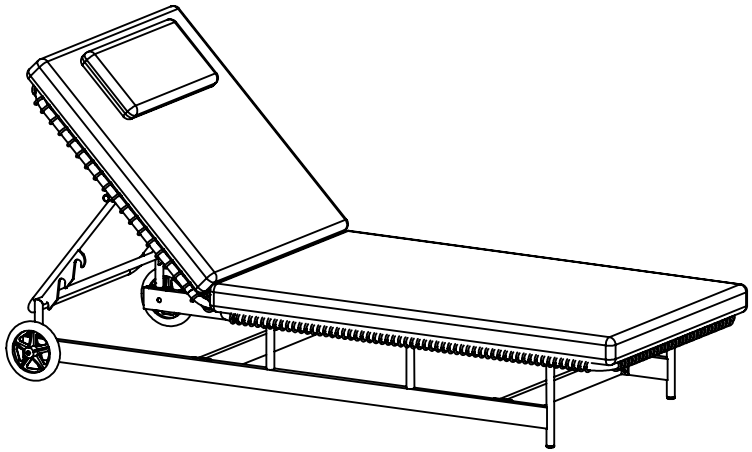

HARDWARES

CODE	PICTURES	Q.TY	CODE	PICTURES	Q.TY
①	 Bolt M6x35mm	08	⑥	 Washer M8 (plastic)	02
②	 Bolt M6x20mm	22	⑦	 Washer M6	30
③	 Bolt M8x90mm	02	⑧	 Allen key	01
④	 Eru M8	02	⑨	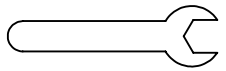 Cle 13	01
⑤	 Washer M8	02	⑩	 Wheels	02

Шезлонг АЛЬФА/ ALFA sunlounge - 43204

CODE	PARTS	Q.TY
Ⓐ	 Sleeping Surface Frame	01
Ⓑ1	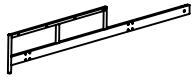 Left Leg Frame	01
Ⓑ2	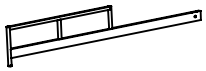 Right Leg Frame	01
Ⓒ	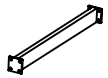 Support Bar	02
Ⓓ	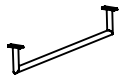 Support Bracket	01
Ⓔ	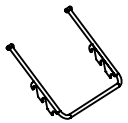 Backrest Adjustment Bar	01
Ⓖ	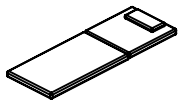 Sun Lounger Cushion	01

STEP 1

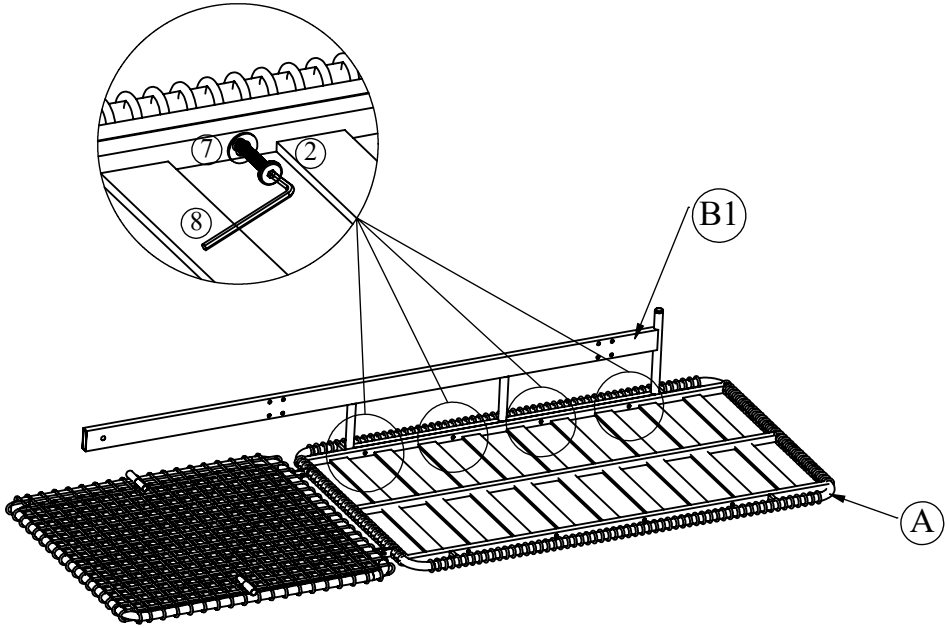

STEP 2

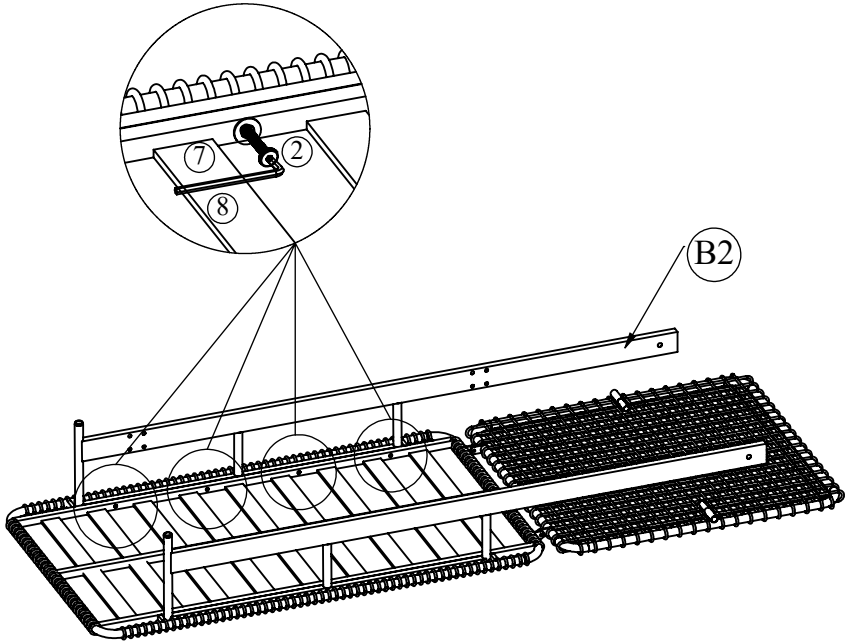

Шезлонг АЛЬФА/ ALFA sunlounge - 43204

CODE	PARTS	Q.TY
Ⓐ	 Sleeping Surface Frame	01
Ⓑ1	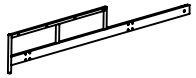 Left Leg Frame	01
Ⓑ2	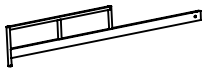 Right Leg Frame	01
Ⓒ	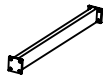 Support Bar	02
Ⓓ	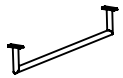 Support Bracket	01
Ⓔ	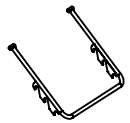 Backrest Adjustment Bar	01
Ⓖ	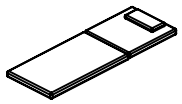 Sun Lounger Cushion	01

STEP 3

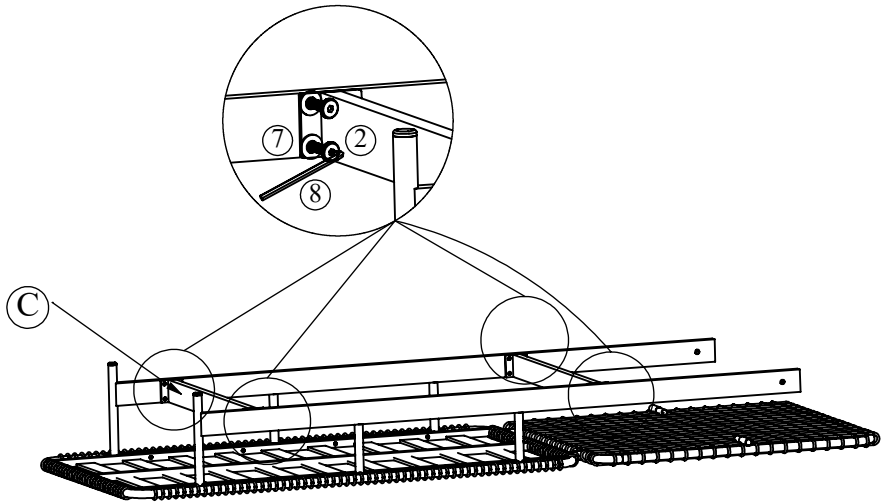

STEP 4

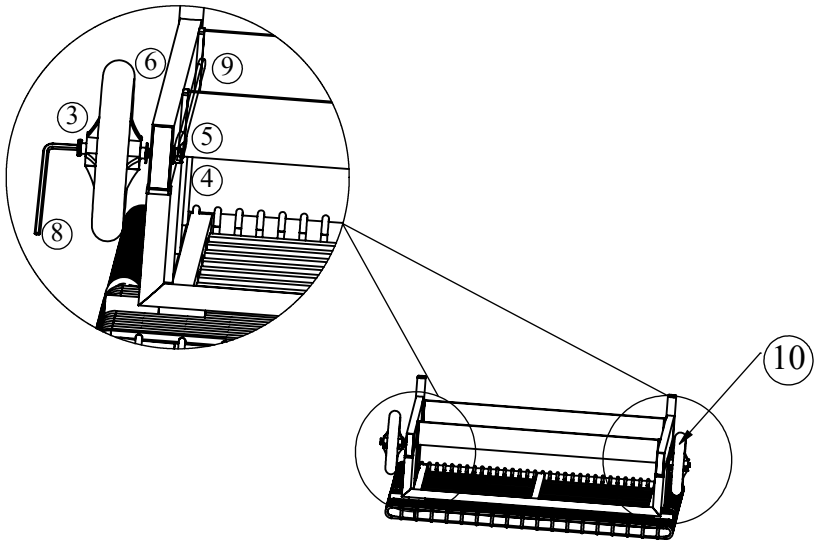

Шезлонг АЛЬФА/ ALFA sunlounge - 43204

CODE	PARTS	Q.TY
Ⓐ	 Sleeping Surface Frame	01
Ⓑ1	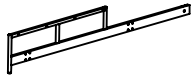 Left Leg Frame	01
Ⓑ2	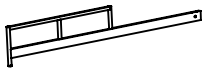 Right Leg Frame	01
Ⓒ	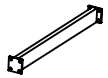 Support Bar	02
Ⓓ	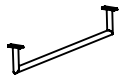 Support Bracket	01
Ⓔ	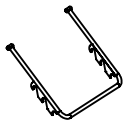 Backrest Adjustment Bar	01
Ⓖ	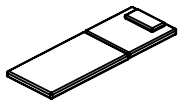 Sun Lounger Cushion	01

STEP 5

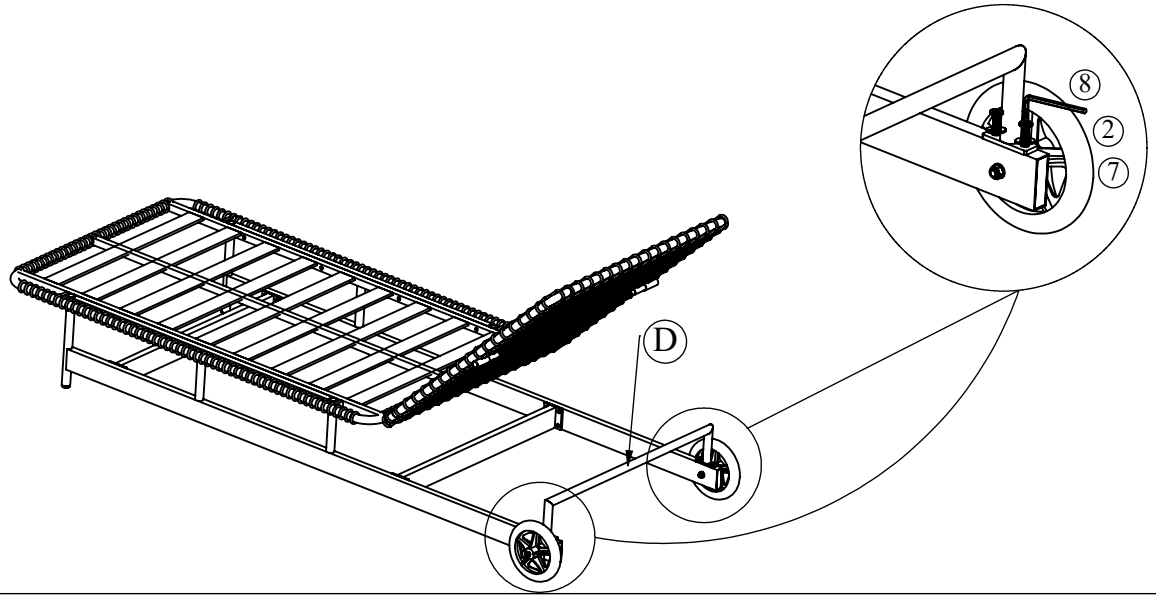

STEP 6

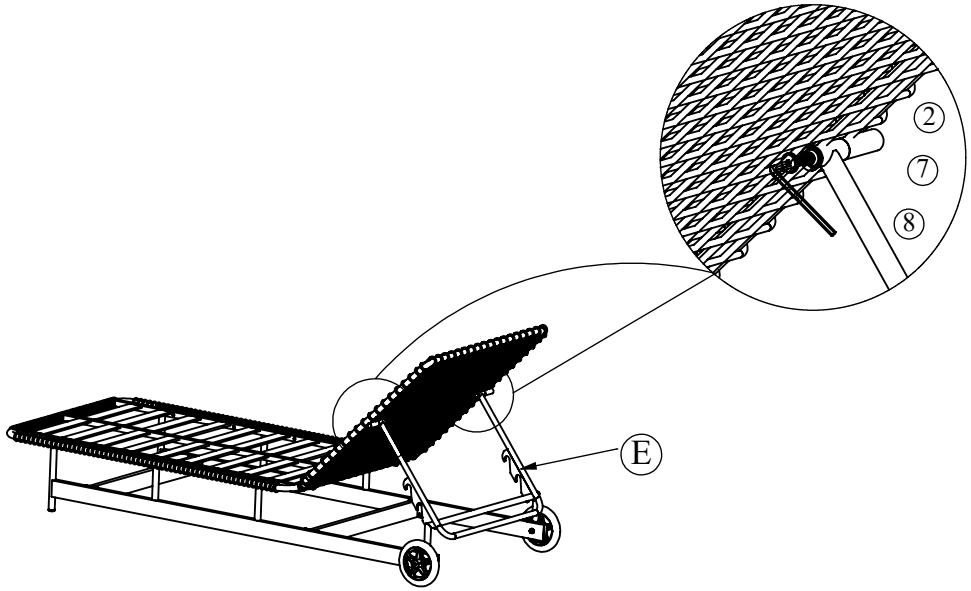

Шезлонг АЛЬФА/ ALFA sunlounge - 43204

CODE	PARTS	Q.TY	FINISH
Ⓐ	 Sleeping Surface Frame	01	
Ⓑ1	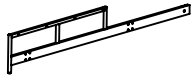 Left Leg Frame	01	
Ⓑ2	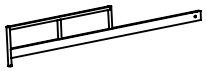 Right Leg Frame	01	
Ⓒ	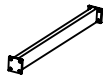 Support Bar	02	
Ⓓ	 Support Bracket	01	
Ⓔ	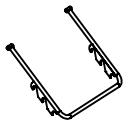 Backrest Adjustment Bar	01	
Ⓖ	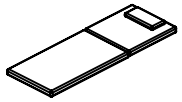 Sun Lounger Cushion	01	

