Safety valves
241-242-251-252-253-S120-S121

Function

Safety valves are used in heating systems to control pressure in heat generators.

When the valve reaches the calibrated pressure, it opens by releasing air into the atmosphere to ensure that the pressure in the system does not reach a limit which would be dangerous to the generator and to system components.













Products

Art.	Description	Connections
241	F/F membrane safety valve	G1/2" - G3/4" - G1"
242	M/F membrane safety valve	G1/2" - G3/4"
251	F/F membrane safety valve	G1/2"
252	M/F membrane safety valve	G1/2"
253	F/F membrane safety valve	G1/2"
S120	F/F solar safety valve	G1/2" - G3/4"
S121	F/F solar safety valve with increased release	(connection with piping) - G3/4" (release)

Technical features

MATERIALS	241-242	251-252-253	S120-S121
Body:	Brass CW617N	Brass CW617N	Brass CW617N
Command rod*:	POM / Brass CW614N	POM / Brass CW617N	Brass CW617N
Screw seal:	FIBRE	FIBRE	FIBRE
Membrane:	EPDM	EPDM	EPDM
Spring:	Stainless steel	Stainless steel	Stainless steel
Command knob:	ABS	ABS	ABS

**POM = Material used for the command rod for pressures up to 6 bars*
Brass = Material used for the command rod for pressures beyond 6 bars

PERFORMANCE	241-242	251-252-253	S120-S121
Maximum percentage of glycol:	50%	50%	50%
Rated pressure:	PN 10	PN 10	PN 10
Max. operating temperature:	110°C	110°C	110°C
Opening overpressure:	10%	10%	10%
Closure deviation:	20%	20%	20%
Calibration:	1.5 -1.8 - 2 - 2.5 - 3 - 3.5 - 4 - 5 - 6 - 7 - 8 - 9 - 10 bar	1.5 -1.8 - 2 - 2.5 - 3 - 3.5 - 4 - 5 - 6 - 7 - 8 - 9 - 10 bar	6 bar

Dimensions

Art. 241

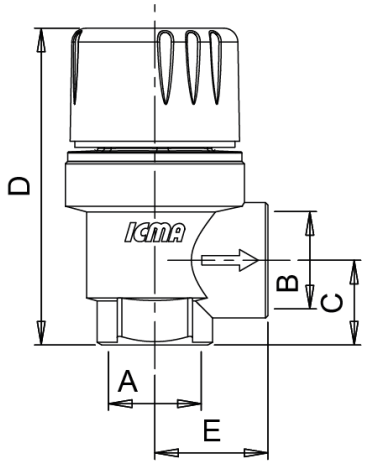

Code	A	B	C	D	E
91241AD...	G1/2"	G1/2"	17	64	23
91241AE...	G3/4"	G3/4"	24	73	25
91241AF...	G1"	G1"	33	81	33

Art. 242

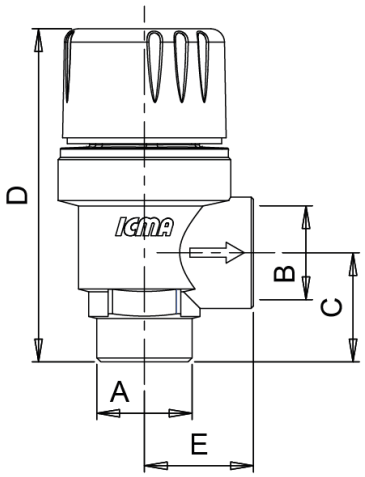

Code	A	B	C	D	E
91242AD...	G1/2"	G1/2"	23	70	23
91242AE...	G3/4"	G3/4"	29	78	25

Art. 252

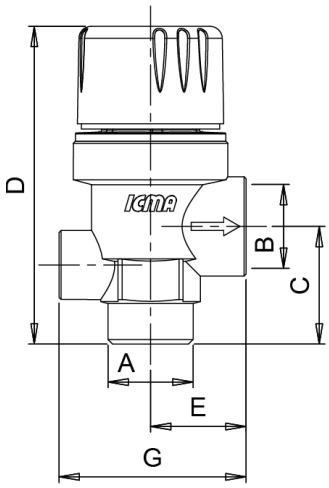

Code	A	B	C	D	E	F
91252AD...	G1/2"	G1/2"	29	77	23	46

Art.251: Without manometer
Art.253: With manometer

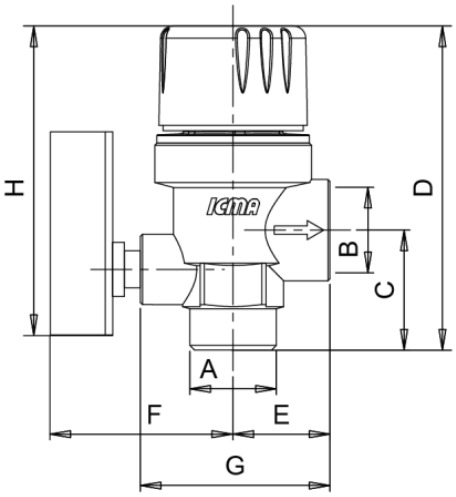

Code	A	B	C	D	E	F	G	H
91253AD...	G1/2"	G1/2"	24	69	23	64	46	80

Art. S120 - S121

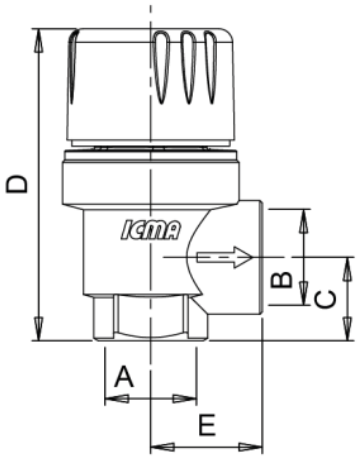

Code	A	B	C	D	E
91S120AD...	G1/2"	G1/2"	18	66	23
91S120AE...	G3/4"	G3/4"	24	66	25
93S121AEAN	G1/2"	G3/4"	25	77	32

Operating principle

Upon reaching the calibrated pressure, the diaphragm, contrasted by a calibrated spring, is raised and fully opens the release passageway.

When pressure decreases the opposite occurs, depending on the tolerances set, causing the valve to close

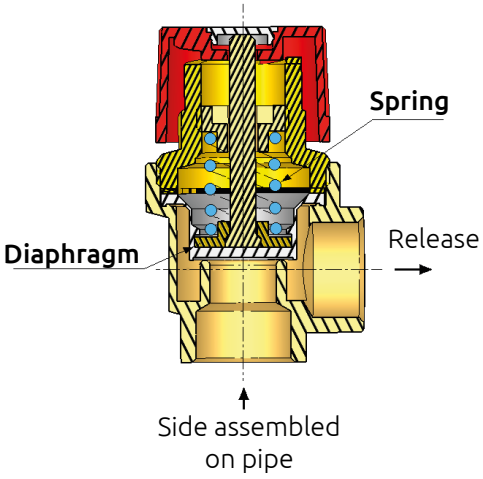

Assembly and installation

Before proceeding with installation of a safety valve it is essential to have specialised technical personnel determine size on the basis of current legislation. Safety valves may not be installed if they are not appropriate for their use. Safety valves must be installed in compliance with the direction of flow shown by the arrow on the valve body.

Safety valves may be assembled in a vertical or horizontal position but must not be assembled upside-down. This would prevent impurities from depositing and affect proper operation

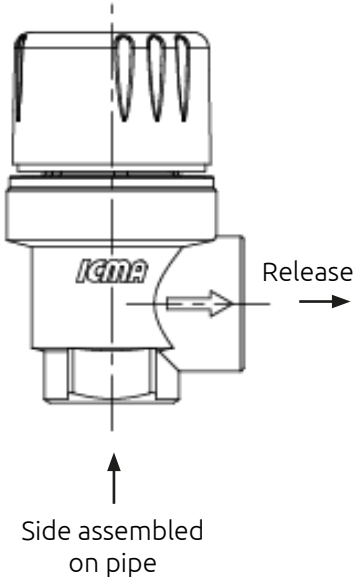

Technical data and rates of flow of safety valves

Symbol	Description	Measure Unit	Value
p_o	Relieving pressure	bar	$p_t + 0,1 * p_t$
p_b	Back pressure (atmospheric)	bar	1,01325 (Approximate to 1)
p_t	Pressione di taratura	bar	From 1,5 to 10 bar
p_{tl}	Pressione di blowdown	bar	0,2*Pt or 0,6 bar in order of bigger value (See ISO 4126-1 par. 7.2.1)
v	Specific volume of water	$\frac{m^3}{Kg}$	Approximate to 0,001

Art. 241, 242, 251, 252, 253

Size	Pt [bar]	Pbl [bar]	Po [bar]	Sorif [mm^2]	Kd Coefficent of discharge	Discharge flow [l/h]	Maximum generator potential [KW]
1/2"	1,5	0,9	1,65	132,73	0,60	100,25	58,14
1/2"	1,8	1,2	1,98	132,73	0,60	113,77	65,99
1/2"	2	1,4	2,2	132,73	0,60	120,46	69,87
1/2"	2,5	1,9	2,75	132,73	0,60	140,54	81,51
1/2"	3	2,4	3,3	132,73	0,60	161,07	93,42
1/2"	3,5	2,8	3,85	132,73	0,60	179,19	103,93
1/2"	4	3,2	4,4	132,73	0,60	201,90	117,10
1/2"	5	4	5,5	132,73	0,60	238,92	138,57
1/2"	6	4,8	6,6	132,73	0,60	281,08	163,03
1/2"	7	5,6	7,7	132,73	0,60	318,56	184,76
1/2"	8	6,4	8,8	132,73	0,60	358,38	207,86
1/2"	9	7,2	9,9	132,73	0,60	387,43	224,71
1/2"	10	8	11	132,73	0,60	447,97	259,82

Size	Pt [bar]	Pbl [bar]	Po [bar]	Sorif [mm^2]	Kd Coefficent of discharge	Discharge flow [l/h]	Maximum generator potential [KW]
3/4"	1,5	0,9	1,65	176,71	0,60	133,46	77,41
3/4"	1,8	1,2	1,98	176,71	0,60	151,47	87,85
3/4"	2	1,4	2,2	176,71	0,60	160,38	93,02
3/4"	2,5	1,9	2,75	176,71	0,60	187,11	108,52
3/4"	3	2,4	3,3	176,71	0,60	214,44	124,38
3/4"	3,5	2,8	3,85	176,71	0,60	238,56	138,37
3/4"	4	3,2	4,4	176,71	0,60	268,81	155,91
3/4"	5	4	5,5	176,71	0,60	318,09	184,49
3/4"	6	4,8	6,6	176,71	0,60	374,22	217,05
3/4"	7	5,6	7,7	176,71	0,60	424,12	245,99
3/4"	8	6,4	8,8	176,71	0,60	477,13	276,74
3/4"	9	7,2	9,9	176,71	0,60	515,82	299,17
3/4"	10	8	11	176,71	0,60	596,41	345,92

Size	Pt [bar]	Pbl [bar]	Po [bar]	Sorif [mm^2]	Kd Coefficent of discharge	Discharge flow [l/h]	Maximum generator potential [KW]
1"	1,5	0,9	1,65	240,53	0,60	181,66	105,36
1"	1,8	1,2	1,98	240,53	0,60	206,17	119,58
1"	2	1,4	2,2	240,53	0,60	218,29	126,61
1"	2,5	1,9	2,75	240,53	0,60	254,68	147,71
1"	3	2,4	3,3	240,53	0,60	291,88	169,29
1"	3,5	2,8	3,85	240,53	0,60	324,71	188,33
1"	4	3,2	4,4	240,53	0,60	365,87	212,21
1"	5	4	5,5	240,53	0,60	432,95	251,11
1"	6	4,8	6,6	240,53	0,60	509,35	295,43
1"	7	5,6	7,7	240,53	0,60	577,27	334,82
1"	8	6,4	8,8	240,53	0,60	649,43	376,67
1"	9	7,2	9,9	240,53	0,60	702,08	407,21
1"	10	8	11	240,53	0,60	811,78	470,83

Installation schemes

Heating systems

Safety valves must necessarily be installed at the top of the heat generator or, alternatively, on the exit pipe, at a distance of no more than one metre (as shown in figure 1).

It must not be possible to close off the pipe connecting the safety valve with the generator.

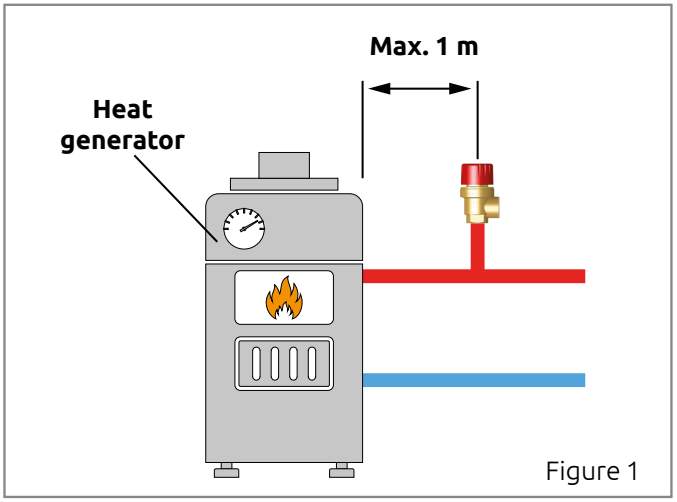

Figure 1

Storage systems

Safety valves must be installed near the hot water tank. Here too it must not be possible to close off the pipe connecting the safety valve with the generator (as shown in figure 2).

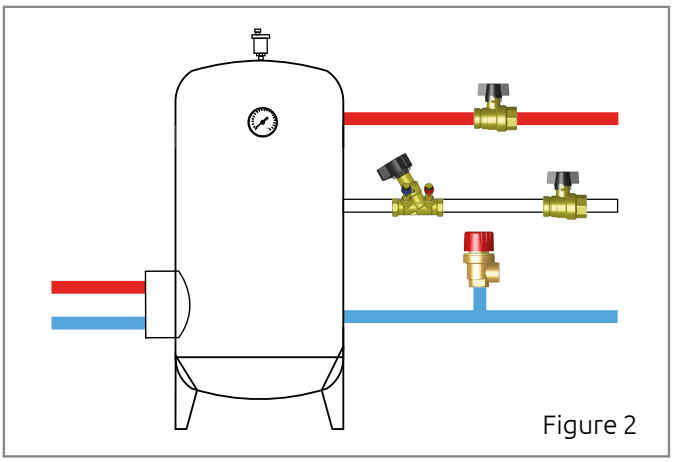
Figure 2

Safety

Read assembly and start-up instructions carefully before starting to use the device in order to prevent accidents and failures caused by improper use. Remember that the guarantee will be forfeited in the event of any unauthorised changes or tampering with the device during assembly and construction.

Operating conditions

The threshold values indicated must never be exceeded. Safe operation is therefore ensured by complying with the general conditions and limits on operation described herein.

Safety regulations for assembly and inspection

Assembly and inspection operations must absolutely be performed by qualified, authorised personnel aware of the instructions contained herein. Make sure that the equipment is turned off before beginning any work on it.

Maintenance

Maintenance work must always be performed by qualified, authorised personnel aware of the instructions contained herein. Make sure that the equipment is turned off before beginning any work on it.

Code calibration

Art.	Size	Bar	Code
241	1/2"	1,5	91241ADAC
241	1/2"	1,8	91241ADBC
241	1/2"	2	91241ADAD
241	1/2"	2,5	91241ADAE
241	1/2"	3	91241ADAF
241	1/2"	3,5	91241ADAG
241	1/2"	4	91241ADAH
241	1/2"	5	91241ADAL
241	1/2"	6	91241ADAN
241	1/2"	7	91241ADAP
241	1/2"	8	91241ADAQ
241	1/2"	9	91241ADAR
241	1/2"	10	91241ADAS
241	3/4"	1,5	91241AEAC
241	3/4"	1,8	91241AEBC
241	3/4"	2	91241AEAD
241	3/4"	2,5	91241AEAE
241	3/4"	3	91241AEAF
241	3/4"	3,5	91241AEAG
241	3/4"	4	91241AEAH
241	3/4"	5	91241AEAL
241	3/4"	6	91241AEAN
241	3/4"	7	91241AEAP
241	3/4"	8	91241AEAQ
241	3/4"	9	91241AEAR
241	3/4"	10	91241AEAS
241	1"	1,5	91241AFAC
241	1"	1,8	91241AFBC
241	1"	2	91241AFAD
241	1"	2,5	91241AFAE
241	1"	3	91241AFAF
241	1"	3,5	91241AFAG
241	1"	4	91241AFAH
241	1"	5	91241AFAL
241	1"	6	91241AFAN
241	1"	7	91241AFAP
241	1"	8	91241AFAQ
241	1"	9	91241AFAR
241	1"	10	91241AFAS

Art.	Size	Bar	Code
242	1/2"	1,5	91242ADAC
242	1/2"	1,8	91242ADBC
242	1/2"	2	91242ADAD
242	1/2"	2,5	91242ADAE
242	1/2"	3	91242ADAF
242	1/2"	3,5	91242ADAG
242	1/2"	4	91242ADAH
242	1/2"	5	91242ADAL
242	1/2"	6	91242ADAN
242	1/2"	7	91242ADAP
242	1/2"	8	91242ADAQ
242	1/2"	9	91242ADAR
242	1/2"	10	91242ADAS
242	3/4"	1,5	91242AEAC
242	3/4"	1,8	91242AEBC
242	3/4"	2	91242AEAD
242	3/4"	2,5	91242AEAE
242	3/4"	3	91242AEAF
242	3/4"	3,5	91242AEAF
242	3/4"	4	91242AEAH
242	3/4"	5	91242AEAL
242	3/4"	6	91242AEAN
242	3/4"	7	91242AEAP
242	3/4"	8	91242AEAQ
242	3/4"	9	91242AEAR
242	3/4"	10	91242AEAS

Code calibration

Art.	Size	Bar	Code
251	1/2"	1,5	91251ADAC
251	1/2"	1,8	91251ADBC
251	1/2"	2	91251ADAD
251	1/2"	2,5	91251ADAE
251	1/2"	3	91251ADAF
251	1/2"	3,5	91251ADAG
251	1/2"	4	91251ADAH
251	1/2"	5	91251ADAL
251	1/2"	6	91251ADAN
251	1/2"	7	91251ADAP
251	1/2"	8	91251ADAQ
251	1/2"	9	91251ADAR
251	1/2"	10	91251ADAS

Art.	Size	Bar	Code
252	1/2"	1,5	91252ADAC
252	1/2"	1,8	91252ADBC
252	1/2"	2	91252ADAD
252	1/2"	2,5	91252ADAE
252	1/2"	3	91252ADAF
252	1/2"	3,5	91252ADAG
252	1/2"	4	91252ADAH
252	1/2"	5	91252ADAL
252	1/2"	6	91252ADAN
252	1/2"	7	91252ADAP
252	1/2"	8	91252ADAQ
252	1/2"	9	91252ADAR
252	1/2"	10	91252ADAS

Art.	Size	Bar	Code
253	1/2"	1,5	91253ADAC
253	1/2"	1,8	91253ADBC
253	1/2"	2	91253ADAD
253	1/2"	2,5	91253ADAE
253	1/2"	3	91253ADAF
253	1/2"	3,5	91253ADAG
253	1/2"	4	91253ADAH
253	1/2"	5	91253ADAL
253	1/2"	6	91253ADAN
253	1/2"	7	91253ADAP
253	1/2"	8	91253ADAQ
253	1/2"	9	91253ADAR
253	1/2"	10	91253ADAS

Art.	Size	Bar	Code
S120	1/2"	6	93S120ADAN
S120	3/4"	6	93S120AEAN

Art.	Size	Bar	Code
S121	1/2”-3/4”	6	93S121AEAN