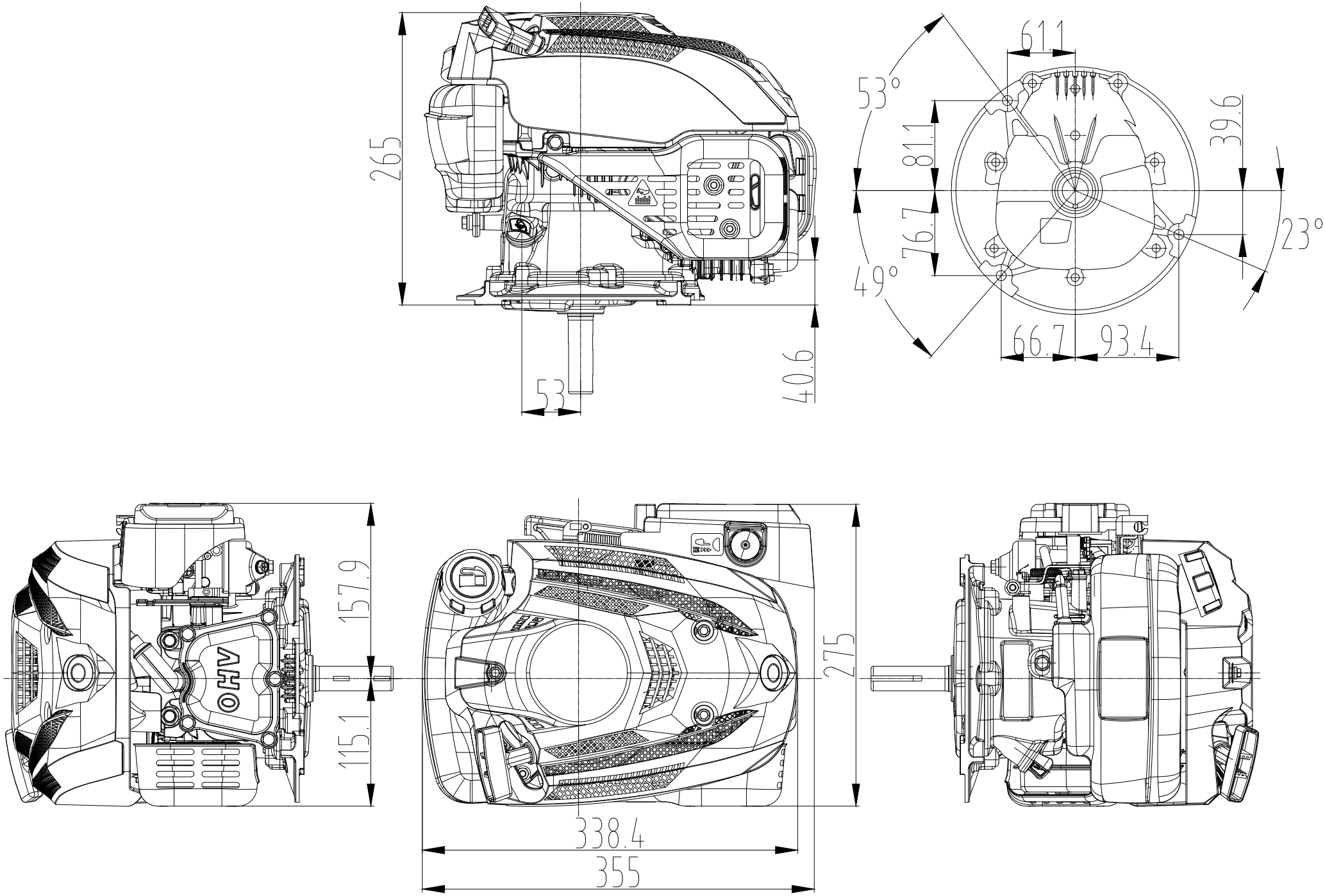
265
53
40.6
61.1
53°
81.1
76.7
49°
39.6
23°
66.7
93.4
157.9
115.1
275
338.4
355

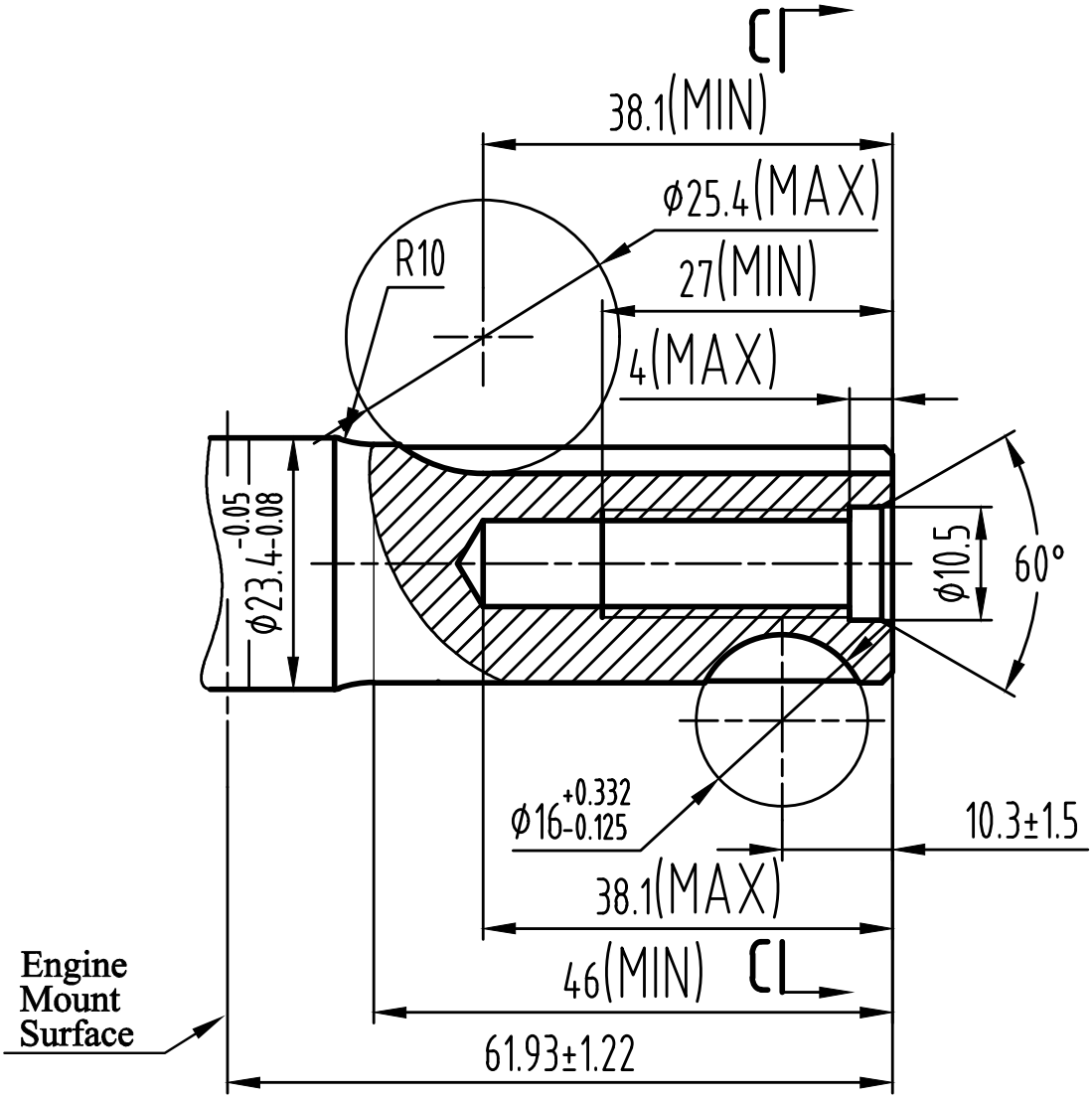
CL
38.1(MIN)
ϕ25.4(MAX)
R10
27(MIN)
4(MAX)
ϕ23.4-0.05-0.08
ϕ10.5
60°
ϕ16+0.332-0.125
10.3±1.5
38.1(MAX)
46(MIN)
CL
Engine
Mount
Surface
61.93±1.22

C - C

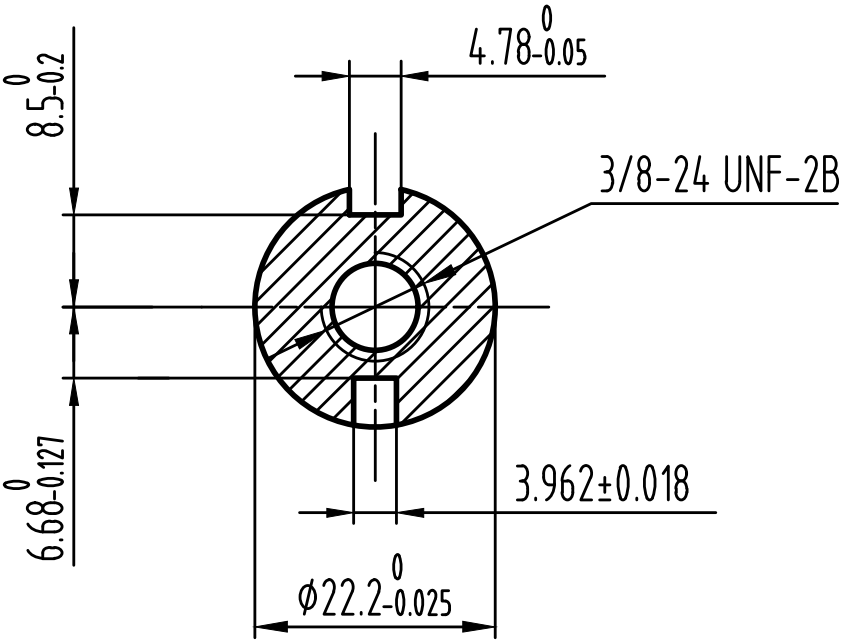
4.78 0-0.05
8.5 0-0.2
3/8-24 UNF-2B
6.68 0-0.127
3.962±0.018
ϕ22.2 0-0.025