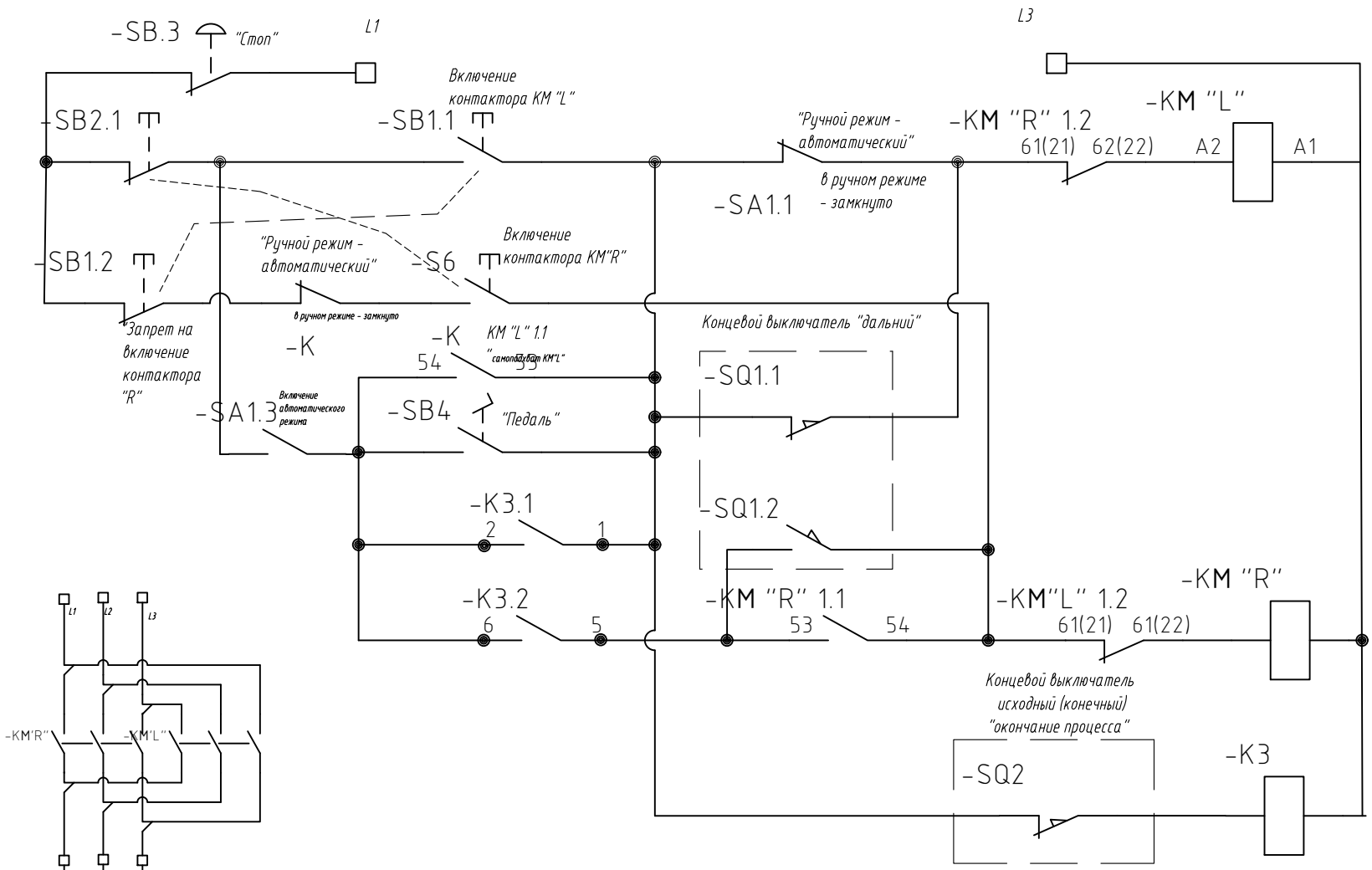

Rev	Sheet	Document No.	Sign	Date
Author				
Checked				
Engineer				
Eng. Appr				
Mfg. Appr				

Lit	Mass	Scale
Sheet	Sheets	

First Reference | Reference No | Sign and date | Dupl. Stock No | Repl. Stock No | Sign and date | Stock Number

Copied By | Format