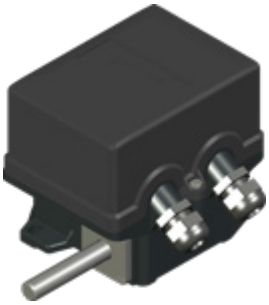

FGR2-EX

EXPLOSION PROOF EQUIPMENT

ROTARY GEAR LIMIT SWITCH

General characteristics

Case	base cover	aluminium antistatic plastic
Ambient temperature		-20 ... +70°C (-4 ... +192°F)
Direct ratio		1:12 - 1:33 - 1:50 - 1:100 - 1:200
Protection class		IP65
Shaft type		stainless steel mounted on ball bearings double overhang shaft version available
Fixing type		base (see options)
Microswitches		up to 6
Cam block		self-lubricating with transparent support for easier cam viewing
Cable entry		2 × M16
Options		3 cam shape options 20 pinion options front fixing (with optional flange)

Marking

Microswitch technical data

Minimum life expectancy	mechanical electrical		1×10^6 cycles 5×10^5 cycles
Rated thermal current	Ith		8 A
Rated insulation voltage	Ui		250 V
Rated impulse withstand voltage	Uimp		1500 V
Rated operating current	ie	resistive load inductive load	8 A - 250 V 1 A - 250 V (cosφ = 0.6)
Pollution degree			2
Protection against electric shock			class II

Giovenzana International B.V. reserves the right to change the features and data shown in this document at any time and without notice.
This document cannot therefore be considered a contract with third parties.

EQUIPMENT CLASSIFICATION IN ACCORDANCE WITH UTILIZATION ZONES

ATEX	2014/34/EU European Directive									
	CE	**0051**	Ex	**II**	**3G**	**Ex dc ec**	**IIB**	**T5**	**Gc**	All the models of the series are verified to be in compliance with the follows: Apparatus Category 3 G, suitable for installation hazardous areas: Zone 2 **(gas)** according to EN/IEC 60079-10-1.
	CE	**0051**	Ex	**II**	**2D**	**Ex tb**	**IIIC**	**T85°C**	**Db**	All the models of the series are verified to be in compliance with the follows: Apparatus Category 2 D, suitable for installation hazardous areas: Zone 21 and 22 **(dust)** according to EN/IEC 60079-10-2.
IECEx	EN IEC 60079-0 EN IEC 60079-1 EN IEC 60079-7 EN IEC 60079-31									
	Ex dc ec	**IIB**	**T5**	**Gc**					**Gas**	
	Ex tb	**IIIC**	**T85°C**	**Db**					**Dust**	
EAC Ex	TR TS 012/2011 GOST 31610.0 GOST IEC 60079-1 GOST R MEK 60079-7 GOST R MEK 60079-31								ТР ТС 012/2011 ГОСТ 31610.0 ГОСТ IEC 60079-1 ГОСТ Р МЭК 60079-7 ГОСТ Р МЭК 60079-31	
	See IECEx scheme reference									
INMETRO	Certificate issued in according to Brazilian requirements attached to INMETRO's Rule nº. 179 issued on May 18th, 2010 nº. 270 issued on May 21th, 2011 nº. 89 issued on May 23th, 2012								Certificado emitido conforme requisitos da avaliação da conformidade de equipamentos elétricos para atmosferas explosivas, anexo às Portarias Inmetro nº. 179 de 18 de maio de 2010 nº. 270 de 21 de junho de 2011 nº. 89 de 23 de fevereiro de 2012	
	See IECEx scheme reference									

CODE READING

F	G	R	2					E	X

Series

FGR2 rotary gear limit switch

Ratio

006 1:12
007 1:33
008 1:50
009 1:100
010 1:200

Number of micro switches

blank 4 micro switches
6 6 micro switches

Other features

EX ATEX compliant

DIMENSIONS

Base fixing

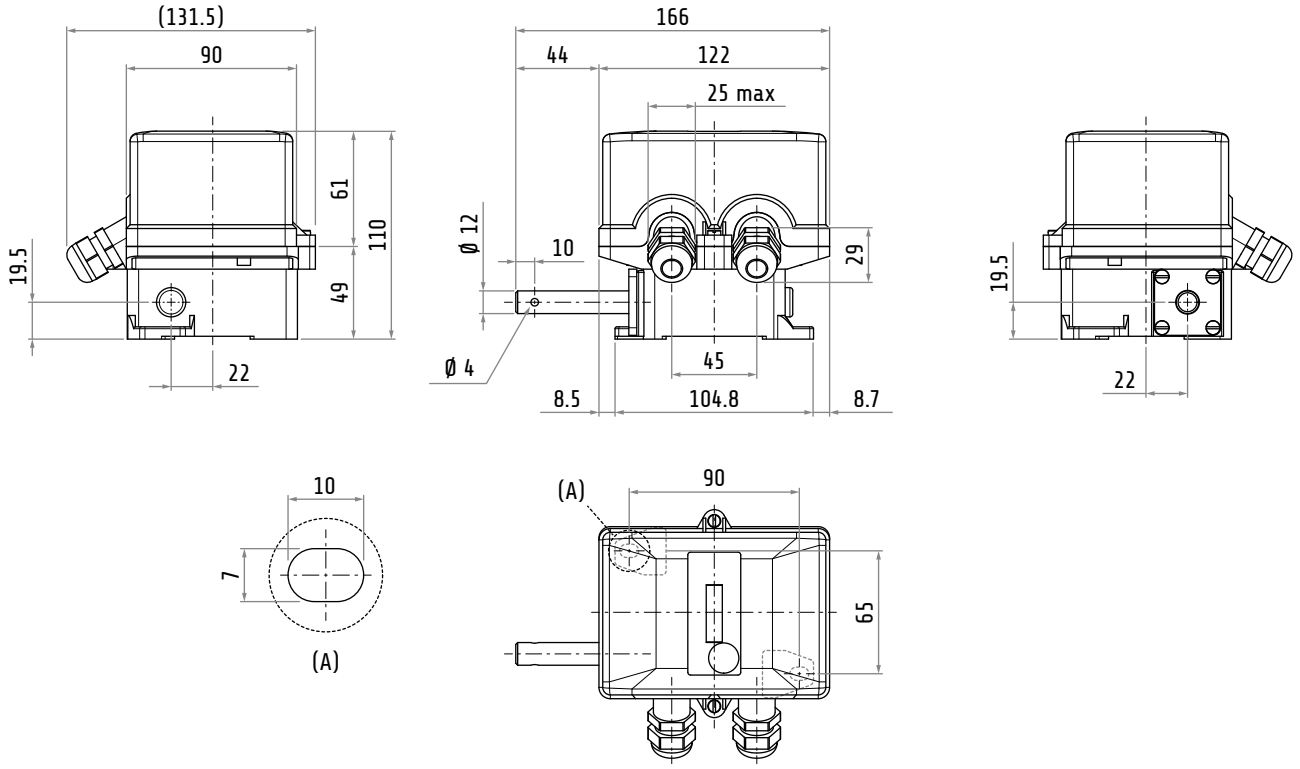

Rear shaft

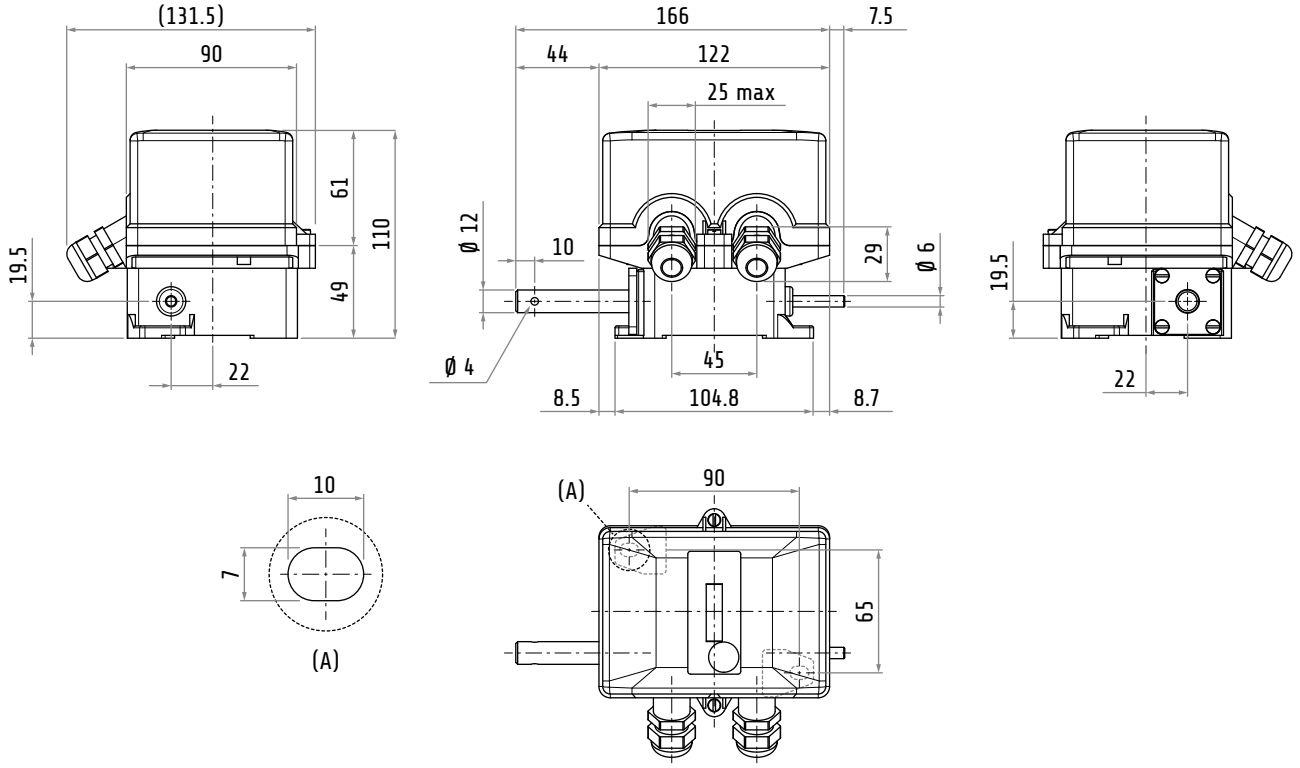
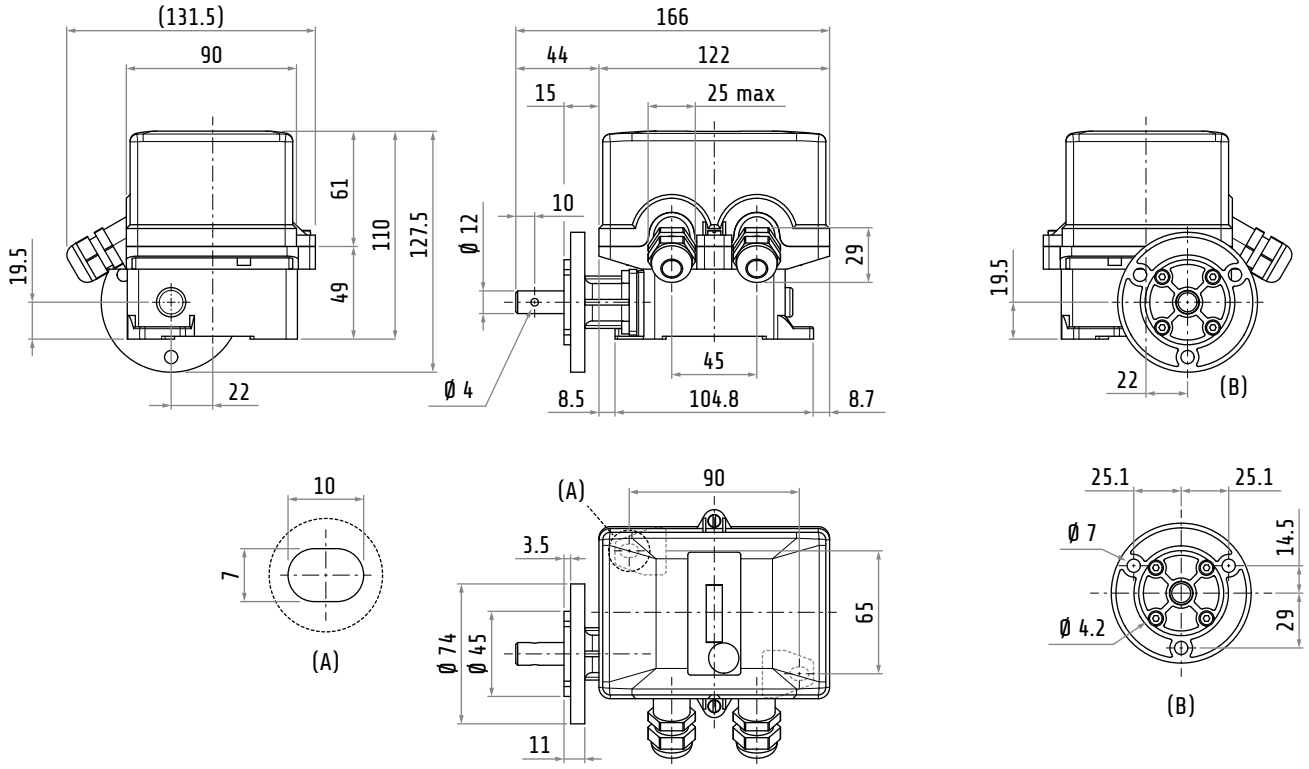
Front fixing with optional flange