SERIES EXPLODED VIEWS OF NAILER

P88-U

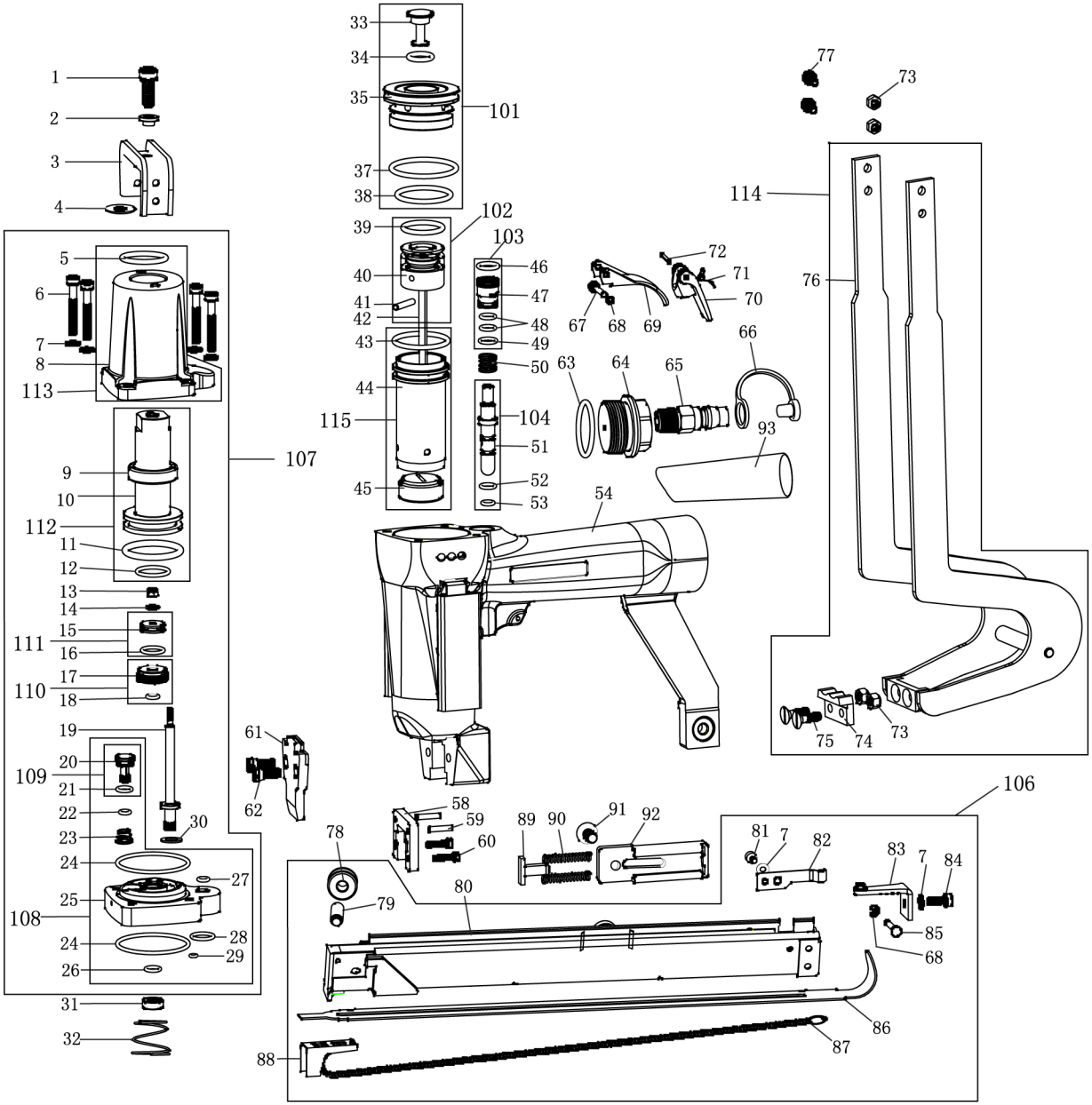

ITEM NO.	PART NO.	PART NAME	QTY	ITEM NO.	PART NO.	PART NAME	QTY
1	B01-01-060160-02-NL	SCREW	1	58	AA03A-031A	ORIENTATION PLATE	1
2	AA03A-015A	WASHER	1	59	B02-030140-02	ROLL PIN	2
3	AA03A-016A	JOINING	1	60	B01-01-030100-02	SCREW	2
4	AA40A-056A	FLAT WASHER	1	61	AA03A-Y10A1	MUZZLE COVER SOLDER	1
5	B08-020000250	O-RING	1	62	AA03A-065A	SCREW	2
6	B01-01-040300-02	SCREW	4	63	B08-028000265	O-RING	1
7	B04-01-040-02	SPRING WASHER	6	64	AA03A-026A	TAIL CAP	1
8	AA03A-001A	BACK CYLINDER	1	65	AA06A-018A	AIR HOSE CONNECTOR	1
9	AA03A-002A	BACK PISTON BUMPER	1	66	AA17A-035A	DUST CAP	1
10	AA03A-003A	BACK PISTON	1	67	B05-028200-04	O-RING	1
11	B08-028000355	O-RING	1	68	B03-01-0025-02	E-RING	2
▲12	B08-016000200	O-RING	1	69	AA03A-030A	TRIGGER	1
13	B07-01-030-00	LOCKNUT	1	70	AA03A-029A	TRIGGER SAFETY	1
14	B04-02-030-02	FLAT WASHER	1	71	AA03A-064A	SPRING	1
15	AA03A-004A	SMALL PISTON	1	72	B02-020160-02	ROLL PIN	1
▲16	B08-010600180	O-RING	1	73	B07-01-040-00	LOCKNUT	6
17	AA03A-006A	BACK PISTON COVER	1	74	AA03A-038A	SHAPED GOODS	1
▲18	B08-004900190	O-RING	1	75	B01-02-040140-02	SCREW	2
▲19	AA03A-Y11A1	PISTON POLE SOLDER	1	76	AA03A-Y01A1	BRACKET	1
20	AA03A-007A	MIDDLE VALVE	1	77	B01-01-040100-02	SCREW	4
▲21	B08-006300180	O-RING	1	78	AA03A-046A	ROLLER	1
▲22	B08-003550180	O-RING	1	79	AA03A-047A	ROLLER AXES	1
23	AA03A-061A	SPRING	1	80	AA03A-Y09A1	NAIL TROUGH SOLDER	1
24	B08-038000180	O-RING	2	81	B01-01-040060-02	SCREW	1
25	AA03A-008B	CYLINDER CAP	1	82	AA03A-041A	SPRING LATCH	1
26	B08-005800190	O-RING	1	83	AA03A-Y06A1	LIMITR	1
27	B08-005000180	O-RING	1	84	B01-01-040080-02	SCREW	1
28	B08-011200180	O-RING	1	85	B05-028190-04	ROLL PIN	1
29	B08-002500150	O-RING	1	86	AA03A-055A	PUSH PIECE	1
30	AA03A-058A	SHIM	1	▲87	AA03A-060A	PULL SPRING	1
31	AA03A-009A	NUT	1	▲88	AA03A-045A	PUSHER	1
32	AA03A-028A	SPRING	1	89	AA03A-032A	T BLOCK	1
33	AA03A-017A	DRAIN TAP	1	90	AA03A-063A	SPRING	2
34	B08-010600265	O-RING	1	91	B01-02-060120-02	SCREW	1
35	AA03A-Y27A1	ACTIVE VALVE	1	92	AA03A-033A	LINK	1
▲37	B08-034500265	O-RING	1	93	GG09A	GRIP COVER	1
▲38	B08-028000265	O-RING	1				
▲39	B08-018000355	O-RING	1				
▲40	AA03A-012A	DRIVER HEAD	1	▲101	AA03A-Y04A1	ACTIVE VALVE SET	
▲41	AA03A-059A	PIN	1	▲102	AA03A-Y16A1	DRIVER SET	
▲42	AA03A-013A	DRIVER	1	▲103	AA03A-Y14A1	AIR CONDUIT SET	
43	B08-028000265	O-RING	1	104	AA03A-Y15A1	AIR PIPE SET	
44	AA03A-010A	CYLINDER	1	106	AA03A-Y13A1	NAIL TROUGH SET	
▲45	AA03A-014A	BUMPER	1	107	AA03A-Y20A1	BACK COVER SET	
▲46	B08-008750180	O-RING	1	108	AA03A-Y05A2	CYLINDER CAP SET	
47	AA03A-024A	AIR CONDUIT	1	109	AA03A-Y24A1	MIDDLE VALVE SET	
▲48	B08-005600180	O-RING	2	110	AA03A-Y22A1	BACK PISTON COVER SET	
▲49	B08-007500180	O-RING	1	111	AA03A-Y23A1	SMALL PISTON SET	
50	AA03A-062A	SPRING	1	112	AA03A-Y25A1	BACK PISTON SET	
51	AA03A-025A	AIR PIPE	1	113	AA03A-Y26A1	BACK CYLINDER SET	
▲52	B08-004000180	O-RING	1	114	AA03A-Y17A1	BRACKET SET	
▲53	B08-004900190	O-RING	1	115	AA03A-Y12A1	CYLINDER SET	
54	AA03A-Y07A1	BODY ASSEM	1				

GBA03A00302
A5