EAR SERIES PUMP DIMENSIONS AND WEIGHTS 50 Hz, 2 POLES (2950 rpm)

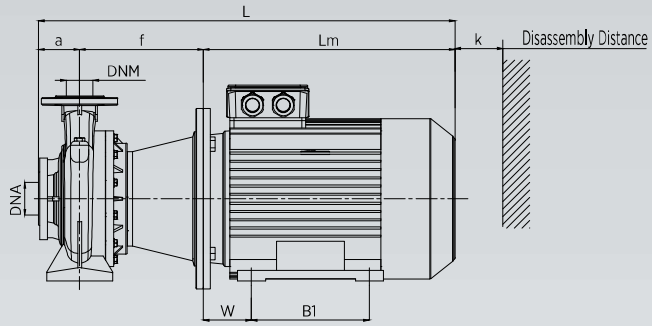

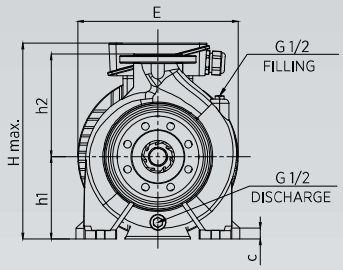

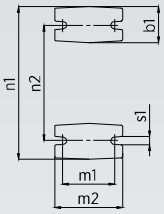

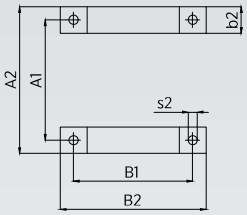

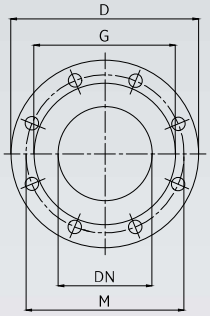

PUMP FLANGES						
DN	D	M	G	HOLE		MAX. Thickness
				N	ø	
32	140	100	76	4	18	18
40	150	110	84	4	18	18
50	165	125	99	4	18	20
65	185	145	118	4	18	20
80	200	160	138	8	18	22
100	220	180	158	8	18	22
125	250	210	188	8	18	22

PUMP TYPE	MOTOR		DIMENSIONS																									Weight (kg)
	kW	IEC	DNA	DNM	a	f	W	h1	h2	b1	c	m1	m2	n1	n2	s1	s2	A1	A2	B1	B2	b2	Lm	E	H max	L	k	
EAR 32/20	5,5	132S	50	32	80	195	90	160	180	50		70	100	240	190	14							361		340	636	150	76
EAR 32/20	7,5																											81
EAR 32/20	11	160M				238	110																476			794		125
EAR 32/26	7,5	132S			100	195	90	180	225	65		95	125	320	260								361		405	656		91
EAR 32/26	11	160M				240	110																476			816		135
EAR 32/26	15																											142
EAR 40/20	7,5	132S	65	40		195	90	160	180	65		60	100	265	212								361		340	656		84
EAR 40/20	11	160M				240	110																476			815		128
EAR 40/20	15																											135
EAR 40/26	11	160M						180	225			95	125	244	260										405			141
EAR 40/26	15																											148
EAR 40/26	18,5	160L																										163
EAR 40/26	22	180M					120																519			859		186
EAR 40/26	30	200L					135																555			895		223
EAR 50/20	11	160M		50		240	110	160	200			70	100	265	212								476		360	815		131
EAR 50/20	15																											138
EAR 50/20	18,5	160L																										153
EAR 50/20	22	180M					120																519		380	858		176
EAR 50/26	18,5	160L					110	180	225			95	125	320	250								476		405	815		166
EAR 50/26	22	180M					120																519			858		189
EAR 50/26	30	200L					135																555			894		226
EAR 50/26	37																											245
EAR 65/20	18,5	160L	80	65			110			75				320	250								476			815		159
EAR 65/20	22	180M					120																519			858		182
EAR 65/20	30	200L					135																555			894		219
EAR 65/26	22	180M				247	120	200	250	80		120	160	360	280	19							519		450	866		201
EAR 65/26	30	200L				253	135																555			908		238
EAR 65/26	37																											257
EAR 65/26	45	225M					150																625		475	978		299
EAR 65/26	55	250M				283	170																644		500	1027		333
EAR 65/26	75	280M					190																885		450	1268		350
EAR 65/26	90																											377
EAR 80/20	22	180M	100	80	125	247	120	180				95	125	345	280								519		430	891		198
EAR 80/20	30	200L				253	135																555			933		235
EAR 80/20	37																											255
EAR 80/20	45	225M					150																625			1003		295
EAR 80-26	37	200L					135	200	280			120	160	400	315								555		480	933		268
EAR 80-26	45	225M					150																625		505	1003		310
EAR 80-26	55	250M					170																644		530	1052		345
EAR 80-26	75	280M				283	190																885		480	1293		365
EAR 80-26	90																											389
EAR 100-20	30	200L	125	100		253	135							360	280								555			933		250
EAR 100-20	37																											270
EAR 100-20	45	225M					150																625		505	1003		310
EAR 100-20	55	250M				283	170																644		480	1052		345
EAR 100-20	75	280M					190																885			1293		367
EAR 100-20	90																											45
EAR 100-26	45	225M				253	150	225						400	315								625		505	1018		320
EAR 100-26	55	250M				283	170																644			1067		355
EAR 100-26	75	280M					190																885			1308		380
EAR 100-26	90																											420