# Installation instruction of WB2335SL.015.CP side basket (left)

Unihopper® — GRASSHOPPER GROUP

## List of accessories

150mm side basket *1

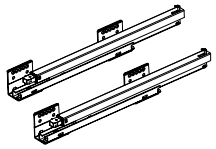
18" soft closing slide (left)*2

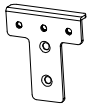
Adjusting plate *2

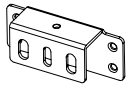
Door connecting plate *2

Fixing plate *2

st4x10 countersunk head tapping screws (KA) *12

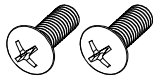
M5x14 pan head screw *2

M5x10 pan head with the screw interface *6

M5x12 countersunk head screw *4

M4x8 countersunk head screw *4

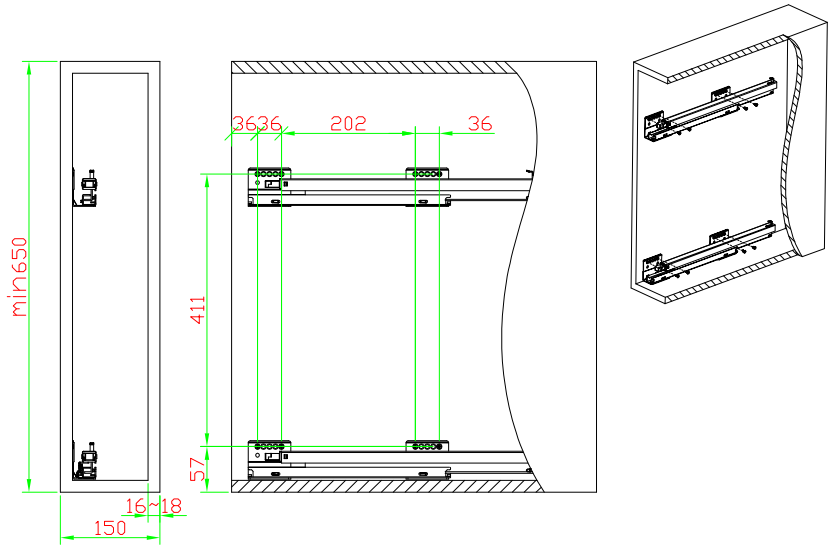

1. Use 8 pcs of st4x10 countersunk head tapping screws (KA) to fix two slides on the side plate.

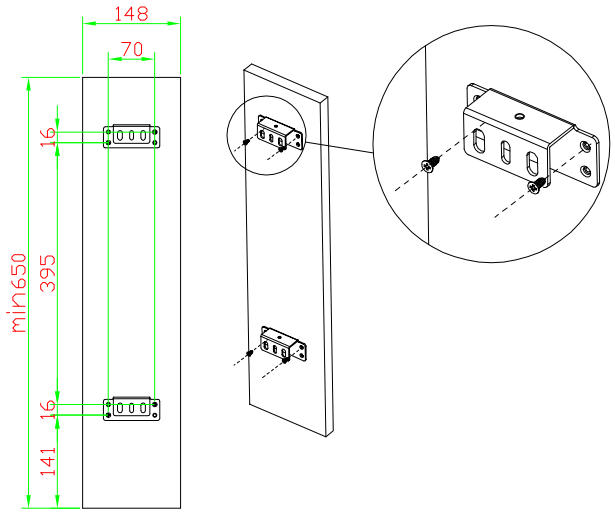

2. Use 4 sets of st4x10 countersunk head tapping screws (KA) to fix two door connecting plates on the door plate.

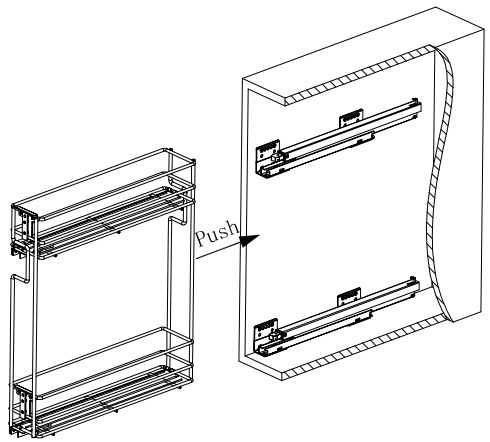

3. Install the side basket that is assembled with cover plate and adjusting plate on the slide.

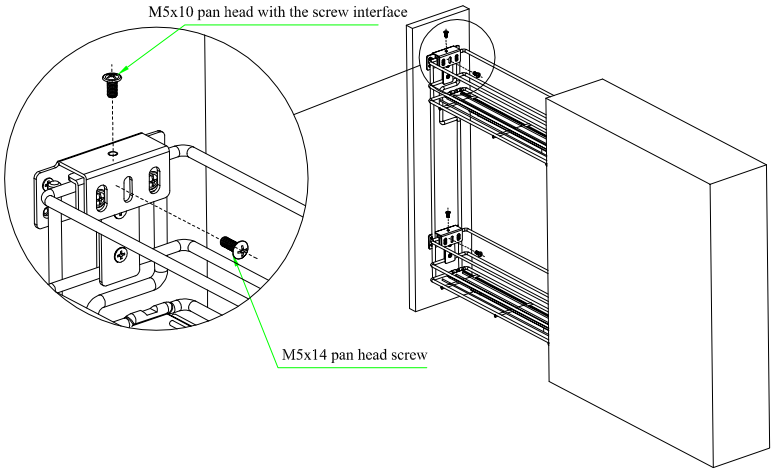

4. Use two pcs of M5x14 pan head screws to fix door plate fastener and basket.

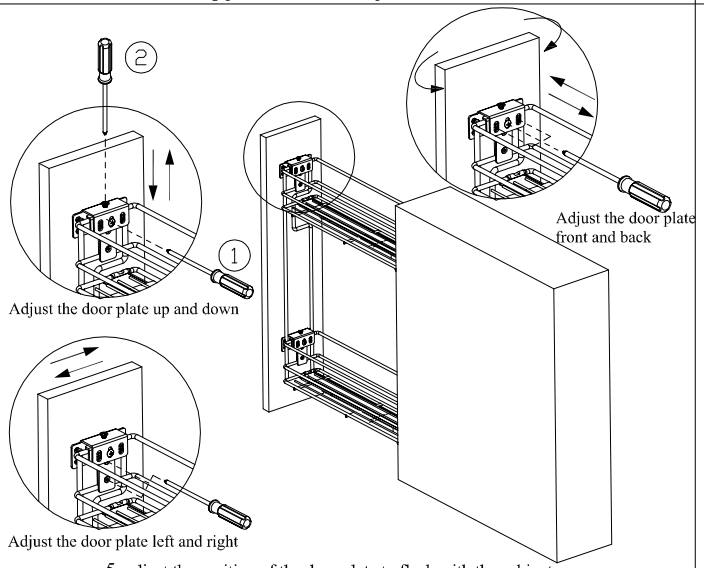

5. adjust the position of the door plate to flush with the cabinet.

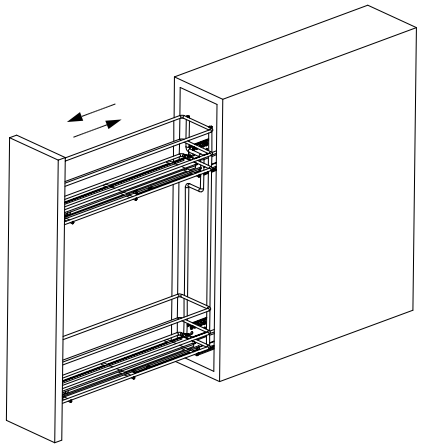
6. Finished